Current part is item (19) on diagram. Available at www.oshkoshequipment.com

(1) SMR CODE	(2) FEDERAL STOCK NUMBER	(3) DESCRIPTION REFERENCE NUMBER & MFR CODE	USABLE ON CODE	(4) UNIT OF MEAS	(5) QTY INC IN UNIT	(6) 15-DAY ORGANIZATION MAINTENANCE ALLOWANCE (A) 1-5	(B) 6-20	(C) 21-50	(D) 51-100	(7) 30-DAY DS MAINTENANCE ALLOWANCE (A) 1-20	(B) 21-50	(C) 51-100	(8) 30-DAY GS MAINTENANCE ALLOWANCE (A) 1-20	(B) 21-50	(C) 51-100	(9) 1-YR. ALW PER 100 EQUIP CNTGCY PLANNING	(10) ILLUSTRATION (A) FIG NO	(B) ITEM NO
PAOZZ	5310-353-2297	NUT, PLAIN OCTAGON: WHEEL BRG ADJ 7979308 (19207)		EA	4	*	*	*	*	*	*	*	*	*	*		26	9
PAOZZ	3110-100-0649	CONE, TAPERED ROLLER BRG: MIL-STD- CODE 711-00596-3000 (INCLUDES ROLLERS & CAGE, AGLE ROW, 3.3750 BORE, 1.4300 W)(OUTER WHEEL BRG) 705155 (12742)		EA	4	*	*	*	*	*	*	*	*	*	*		26	10
PAOZZ	3110-198-1468	CONE, TAPERED ROLLER BRG: MIL-STD- CODE 711-00593-3011 (INCLUDES ROLLERS & CAGE, AGLE-ROW, 3.5000 BORE, 1.4300 W)(INNER WHEEL BRG) 712286 (21450)		EA	4	*	*	*	*	*	*	*	*	*	*		26	11
PAOZZ	5310-880-7745	NUT, PLAIN, HEX: 7/16-20NF-3 MS51968-11 (96906)		EA	40	*	*	*	*	*	*	*	*	*	*		26	12
PAOZZ	5310-209-0965	WASHER, LOCK, SPLIT: 7/16 ID MS35338-47 (96906)		EA	40	*	*	*	*	*	*	*	*	*	*		26	13
PAOZZ	2530-211-6129	COVER: INSPECTION HOLE 7409393 (19207)		EA	4	*	*	*	*	*	*	*	*	*	*		26	14
PAOZZ	5306-740-9389	BOLT, RIBBED SHOULDER, HEX HD: 7/16- 20UNF-2A X 1-7/8 7409389 (19207)		EA	40	*	*	*	*	*	*	*	*	*	*		26	15
PAOFZ	2530-093-5597	DRUM, BRAKE 7409394 (19207)		EA	4	*	*	*	*	*	*	*	*	*	*		26	16
PAOZZ	5306-733-9239	BOLT, RIBBED: WHEEL HUB, RIVETED, TYPE, 3/4- 16NF X 2-15/32 (LEFT) 7339239 (19207)		EA	20	*	*	*	*	*	*	*	*	*	*		26	17
PAOZZ	5306-383-4957	BOLT, RIBBED: WHEEL HUB, RIVETED TYPE, 3/4-16NF X 2-15/32 (RIGHT) 7339238 (19207)		EA	20	*	*	*	*	*	*	*	*	*	*		26	17
PAOZZ	2530-404-4440	ADAPTER, BRAKE DRUM 8710724 (19207)		EA	4	*	*	*	*	*	*	*	*	*	*		26	18
PAOZZ	3110-142-4390	CUP, TAPERED ROLLER BRG: MIL-STD- CODE 711-00592-1011 706691 (12742)		EA	8	*	*	*	*	*	*	*	*	*	*		26	19
PAOZZ	2530-751-8887	HUB, WHEEL 8710723 (19207)		EA	4	*	*	*	*	*	*	*	*	*	*		26	20
PAOZZ	3110-100-4223	BEARING, ROLLER, TAPERED: OUTER HUB BRG ASSY 703077 (21450)		EA	4	*	*	*	*	*	*	*	*	*	*		26	21
PAOZZ	3110-100-4220	BEARING, ROLLER, TAPERED: INNER HUB BRG ASSY MS19081-137 (96906)		EA	4	*	*	*	*	*	*	*	*	*	*		26	22
PAOZZ	2520-740-9550	SEAL, PLAIN ENCASED: HUB BRG OIL 7409550 (19207)		EA	4	*	*	*	*	*	*	*	*	*	*		26	23

Oshkosh Equipment Sales

Current part is item (19) on diagram. Available at www.oshkoshequipment.com

Current part is item (19) on diagram. Available at www.oshkoshequip

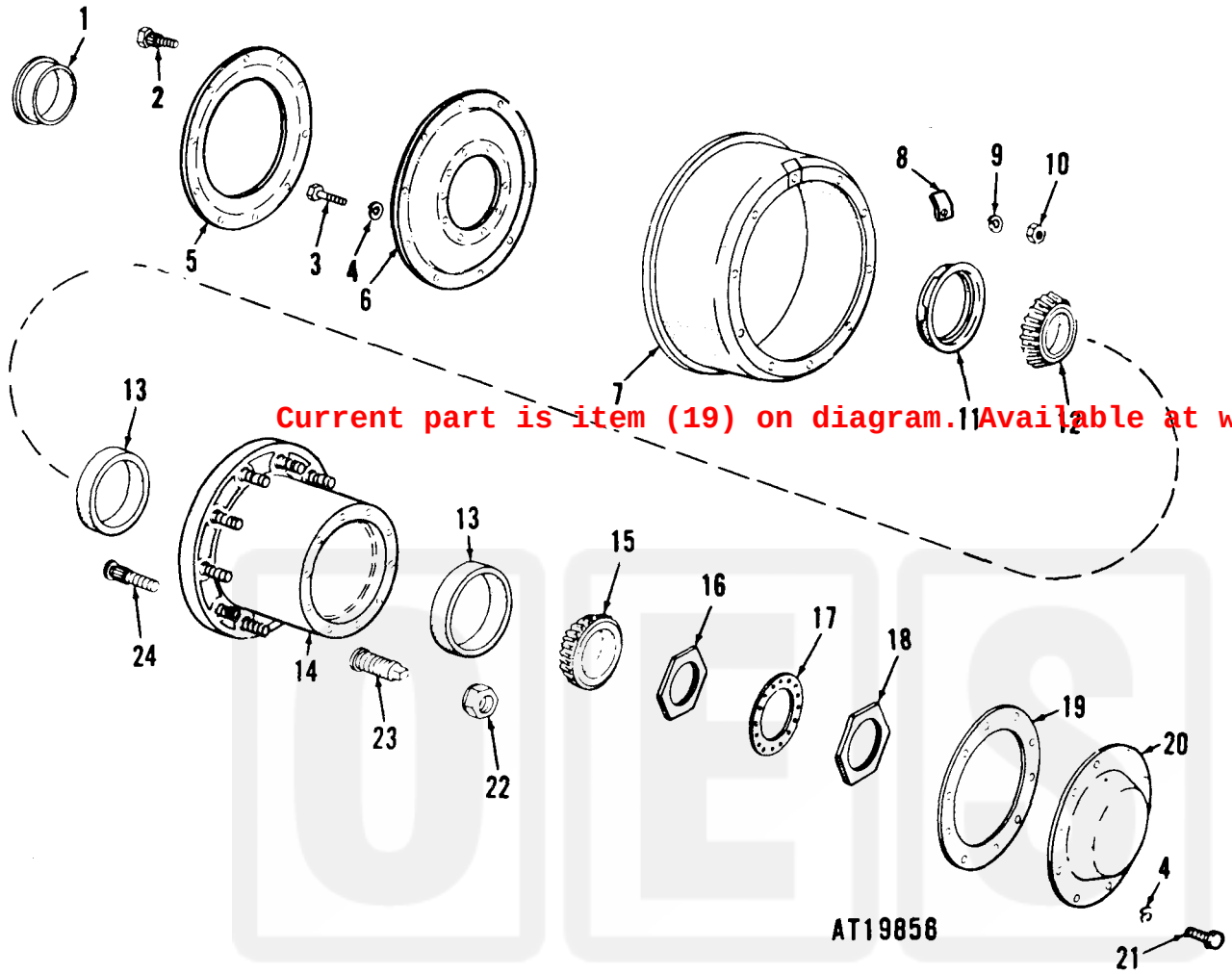

Figure 25. Hub and drum assembly—M269, M270.

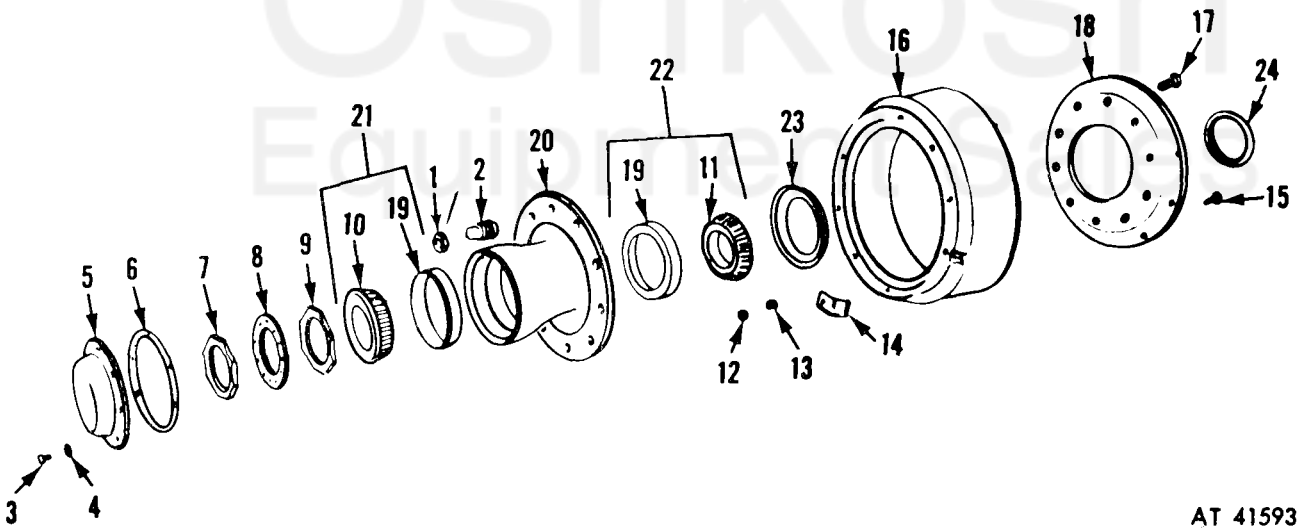

Figure 26. Hub and drum assembly—269A1, M270A1.

Current part is item (19) on diagram. Available at www.oshkoshequip